2-Way Clothing Racks with Square Arms

ITEMS #60105, #60106, #60107, #60340, #60341, #60342

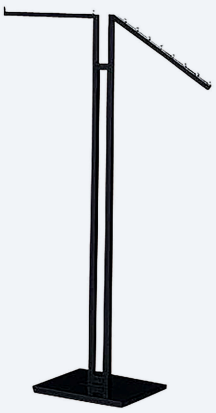

THIS GUIDE COVERS

- 2-Way Clothing Rack with Straight and Slant Arms Chrome #60105
- 2-Way Square-Base Clothing Rack with Straight Arms Chrome #60106
- 2-Way Square-Base Clothing Rack with Slant Arms Chrome #60107
- 2-Way Clothing Rack with Straight and Slant Arms Black #60340
- 2-Way Square-Base Clothing Rack with Straight Arms Black #60341
- 2-Way Square-Base Clothing Rack with Slant Arms Black #60342

BEFORE YOU BEGIN

STEPS	PARTS	TOOLS
6 steps	12 pieces, checklist on page 2	Allen wrench (included)

Need help?

Missing a part or have a question? We can help.

CALL
1-800-823-8887

EMAIL
contactus@storesupply.com

ONLINE
storesupply.com

MAIL
12955 Enterprise Way, Bridgeton, MO 63044

Scan to see this product online

Note: Identify all parts and review all instructions before beginning. Refer to the lower illustration for detailed alignment of the parts.

Parts list: upright/base assembly

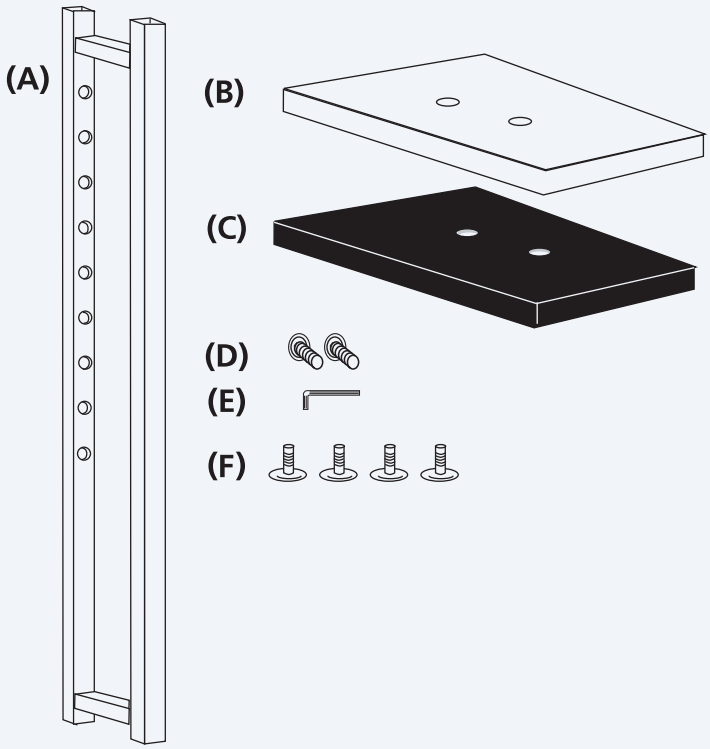

Check the carton

Tick off each part before you start.

- ☐ **1 ×** Upright (part A)
- ☐ **2 ×** Bolts (part D), removed from bottom of upright
- ☐ **2 ×** Adjustable rack arms (not shown)
- ☐ **1 ×** Base cover plate (part B)
- ☐ **1 ×** Allen wrench (part E)
- ☐ **1 ×** Base weight (part C)
- ☐ **4 ×** Adjustable levelers (part F)

2-Way Clothing Racks with Square Arms

Items #60105, #60106, #60107 and 3 more

STEP 1

Remove the 2 bolts (part D) from upright (part A).

STEP 2

Insert base weight (part C) into base cover plate (part B).

STEP 3

Position the upright (part A) over holes in base.

STEP 4

Attach upright through base cover plate (part B) and weight (part C) with the two bolts (part D).

STEP 5

Tighten bolts securely with wrench (part E).

STEP 6

Screw in levelers (part F).

Finally, slide in arms (pushing buttons) to desired height. Adjust leveler glides as necessary.

