# 2-Way Clothing Rack with Straight Arms

ITEM #60466 | COLOR Raw Steel



## BEFORE YOU BEGIN

STEPS
2 steps

PARTS
15 pieces, checklist on page 2

## Need help?

Missing a part or have a question? We can help.

CALL
1-800-823-8887

EMAIL
contactus@storesupply.com

ONLINE
storesupply.com

MAIL
12955 Enterprise Way, Bridgeton, MO 63044

Scan to see this product online

## Parts in the carton

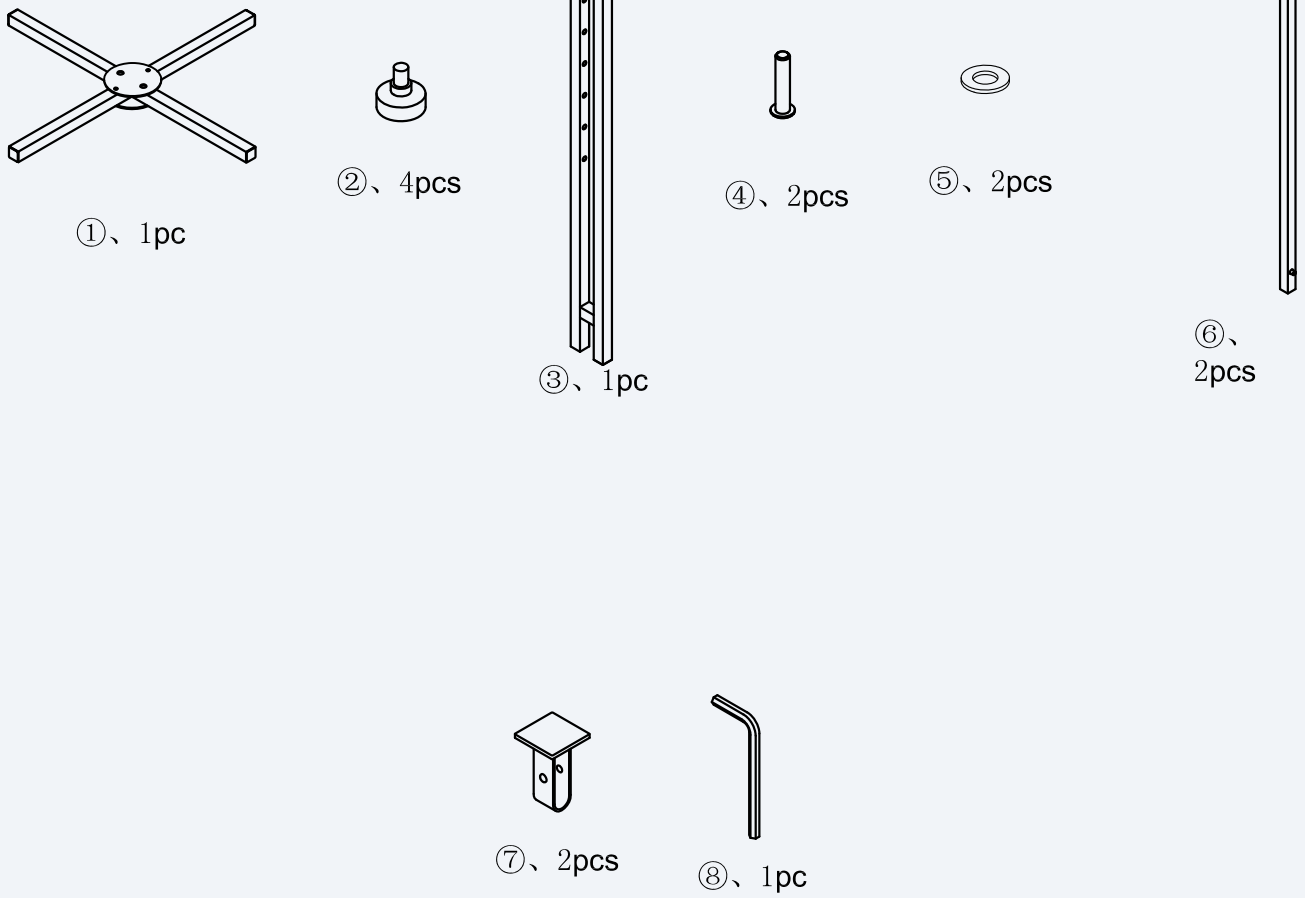


## Check the carton

Tick off each part before you start.

- ☐ **1 ×** Part 1
- ☐ **4 ×** Part 2
- ☐ **1 ×** Part 3
- ☐ **2 ×** Part 4
- ☐ **2 ×** Part 5
- ☐ **2 ×** Part 6
- ☐ **2 ×** Part 7
- ☐ **1 ×** Part 8

## STEP 1

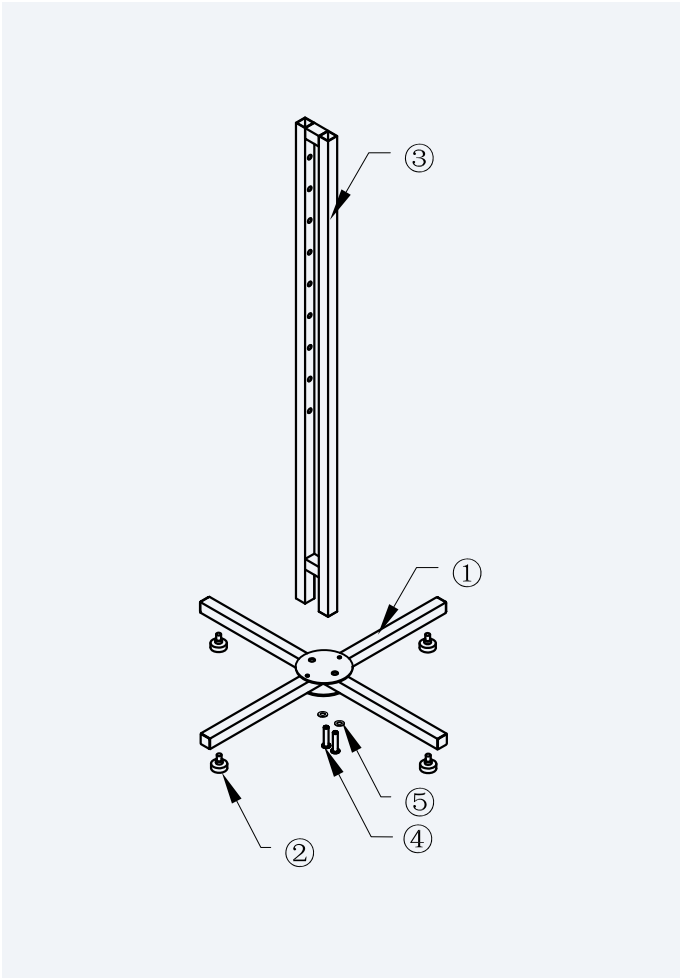


## STEP 2

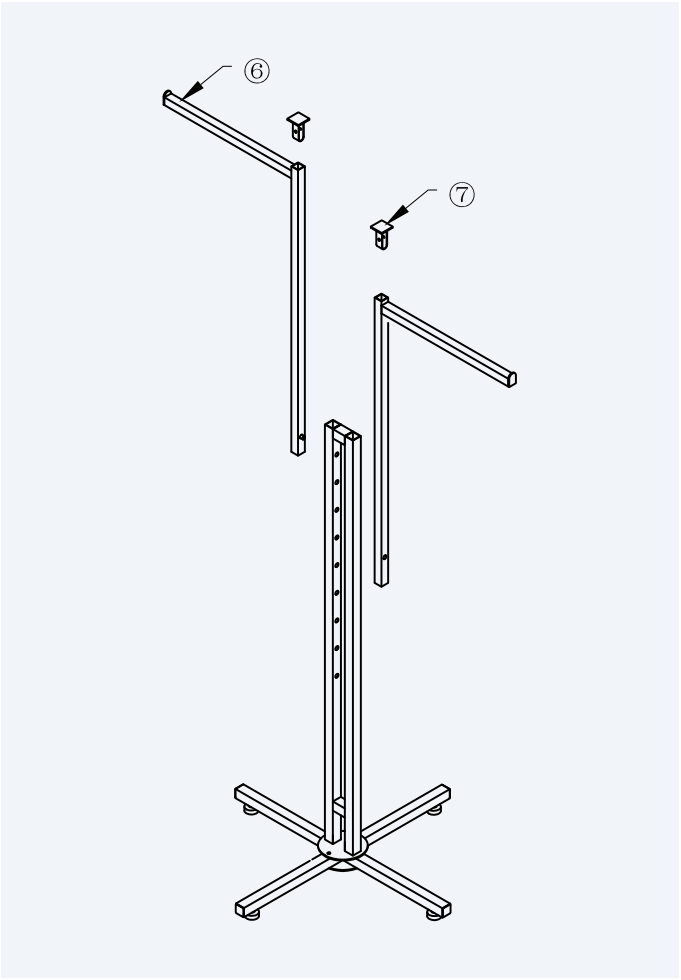


## Assembly complete

