2-Way Clothing Rack with Straight Arms

ITEM #60566 | COLOR Ivory



BEFORE YOU BEGIN

STEPS	PARTS	TOOLS
9 steps	15 pieces, checklist on page 2	Allen wrench (included)

Need help?

Missing a part or have a question? We can help.

CALL
1-800-823-8887

EMAIL
contactus@storesupply.com

ONLINE
storesupply.com

MAIL
12955 Enterprise Way, Bridgeton, MO 63044

Scan to see this product online

Parts in the carton

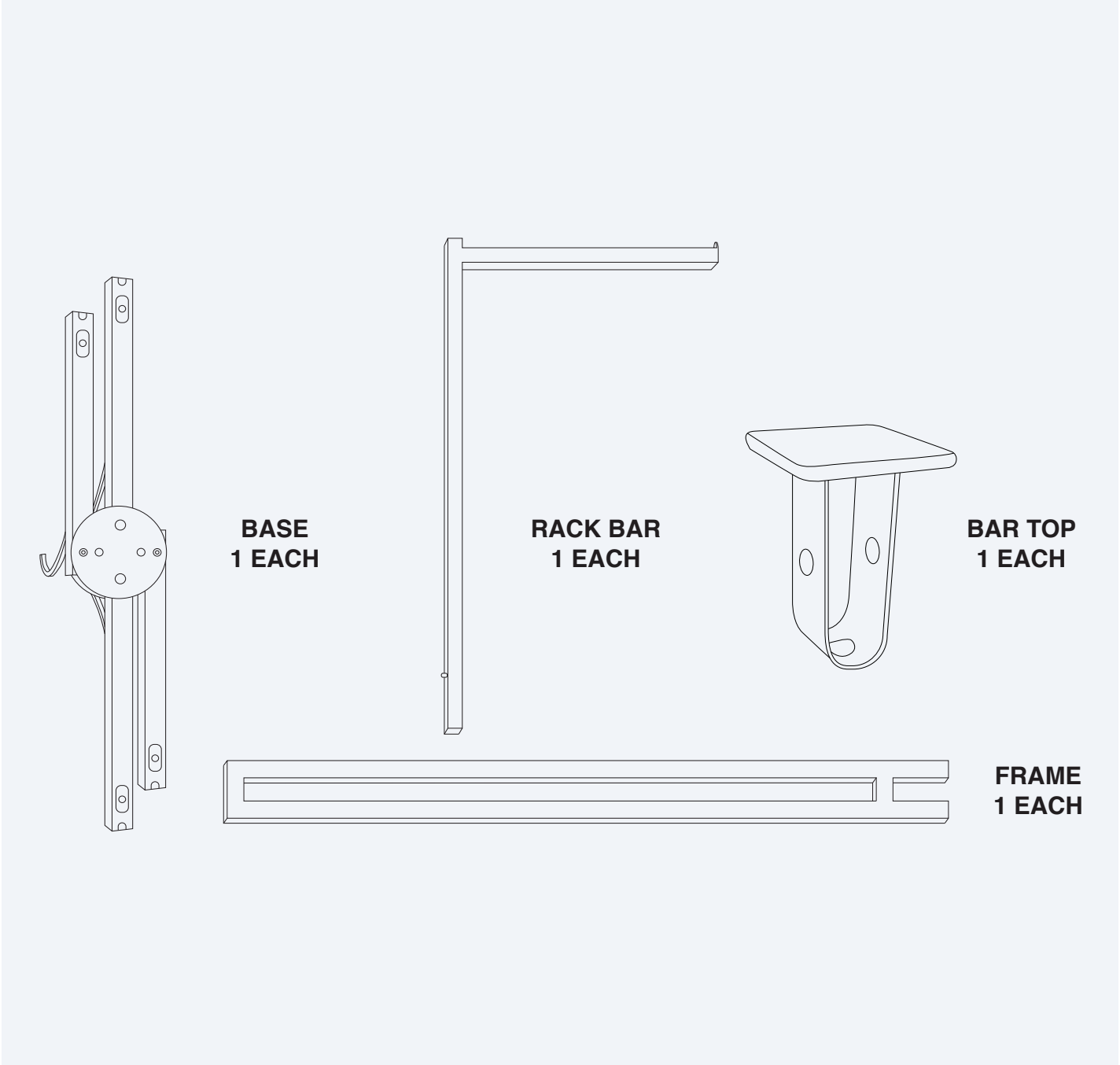

Check the carton

Tick off each part before you start.

- ☐ **1 ×** Base
- ☐ **1 ×** Frame
- ☐ **2 ×** 2” Allen head screw
- ☐ **2 ×** Rack bar
- ☐ **1 ×** Allen wrench
- ☐ **2 ×** 3/4” washer
- ☐ **2 ×** Bar top
- ☐ **4 ×** Leg screws

Hardware and tools in the bag SHOWN AT ACTUAL SIZE

Actual size: Hardware below is shown at actual size. If you are not sure which part is correct, place the piece on top of the drawing below for help during assembly.

Print at 100% scale. This bar measures 1 inch when the page prints at the right size.

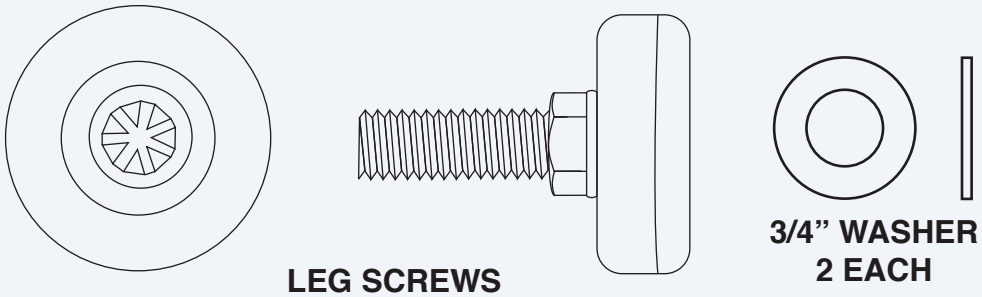

LEG SCREWS
4 EACH

3/4” WASHER
2 EACH

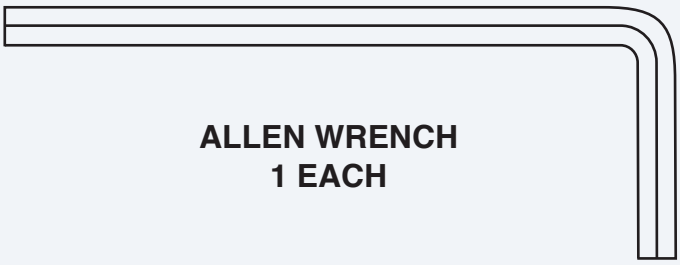

ALLEN WRENCH
1 EACH

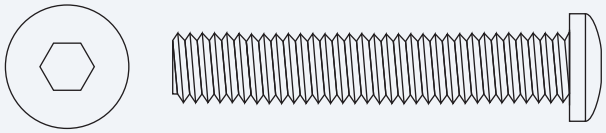

2” ALLEN HEAD SCREW
2 EACH

STEP 1

LOCATE

1 × Base

4 × Leg screws

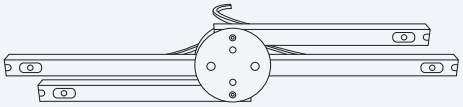

(1)ea.

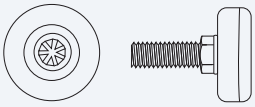

(4)ea.

STEP 2

See figure 1

Locate the 4 holes located beneath the base assembly. Insert (4) leg screws into each hole, tightening the leg screws by hand until it is flush with the assembly.

FIGURE 1

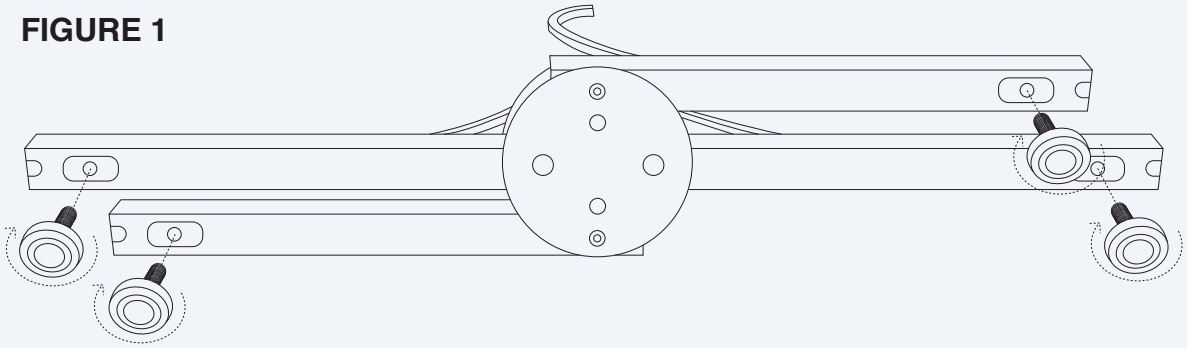

STEP 3

See figure 2

Swing the 2 bars of the base assembly out until they lock into place.

FIGURE 2

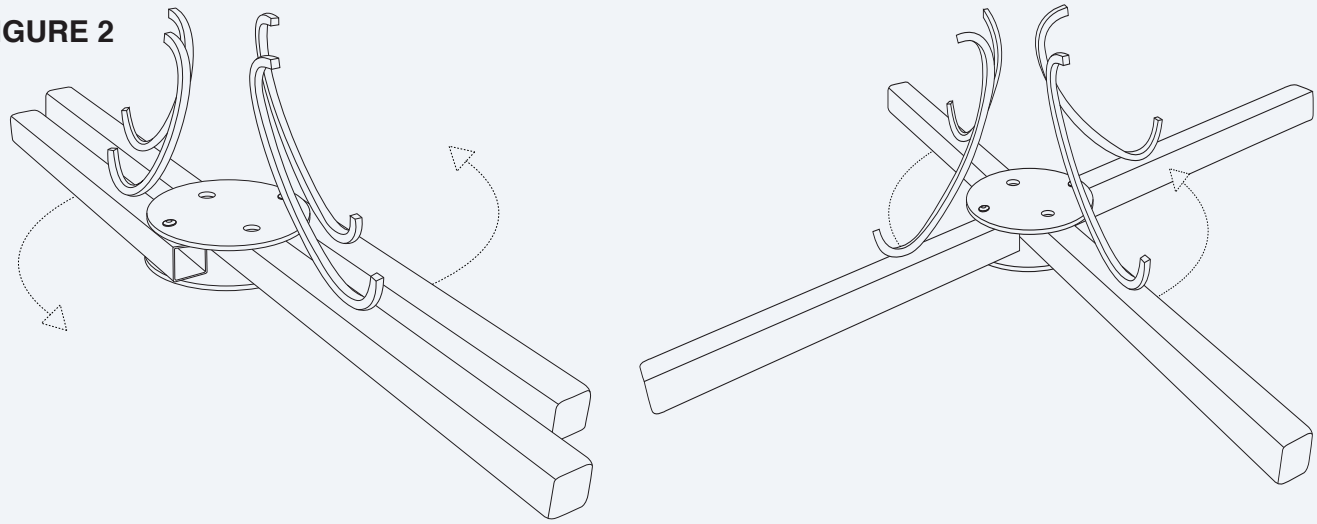

STEP 4

LOCATE

- **1 ×** Base assembly
- **1 ×** Frame
- **2 ×** 3/4” washers
- **2 ×** Allen head screws

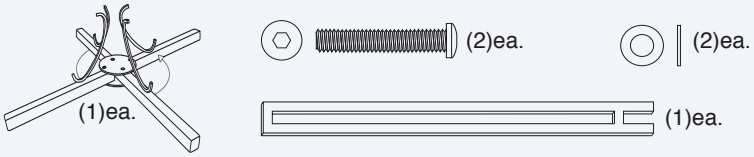

STEP 5

See figure 3

Insert the (2) 3/4” washers onto the (2) 2” screws.

Locate the screw holes on the bottom of the frame. Align those holes to those on the top of the base. Slide in the (2) 2” Allen head screws into those aligned holes. Tighten the screws with the supplied Allen wrench.

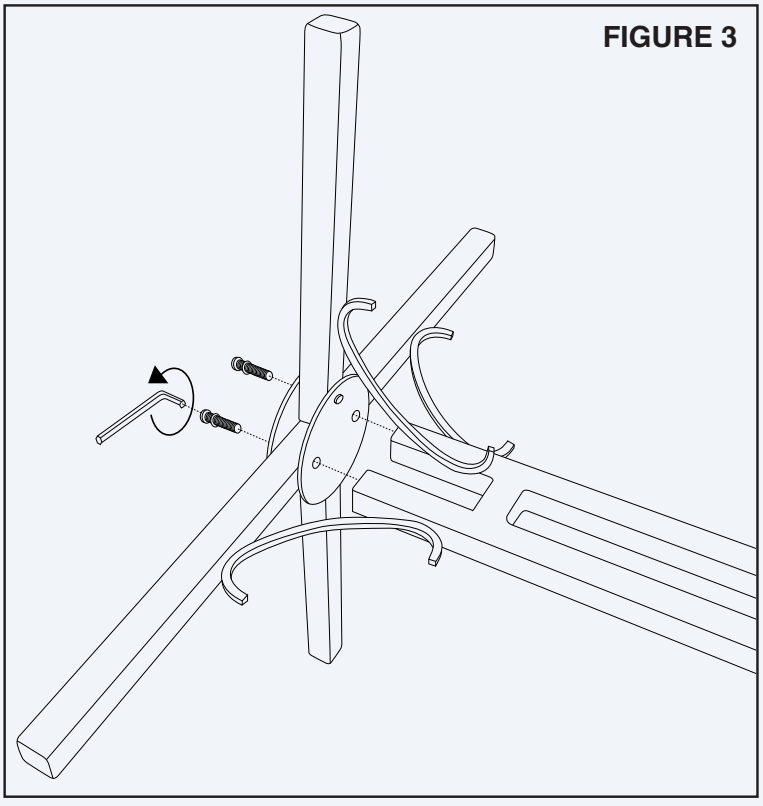

STEP 6

LOCATE

2 × Rack bars

2 × Rack tops

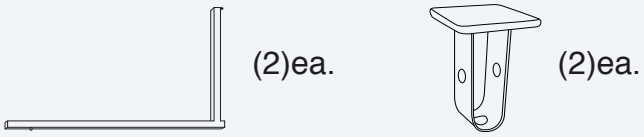

STEP 7

See figure 4

Insert (1) rack top into the top of (1) rack bar. Press firmly down to fully insert the rack top.

Repeat the above step for the remaining (1) rack top and (1) rack bar.

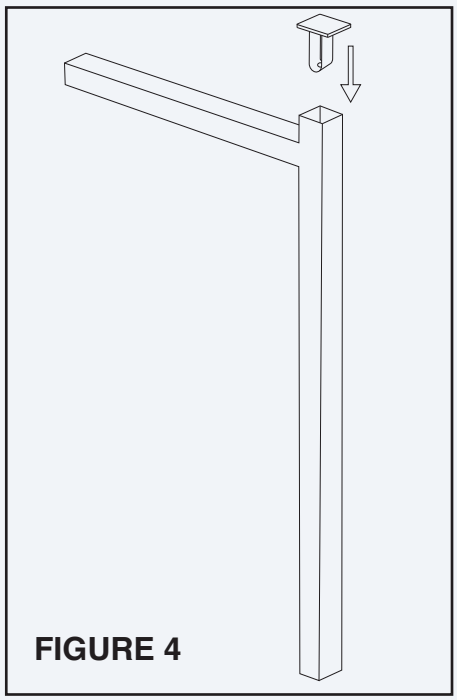

STEP 8

LOCATE

2 × Rack bars

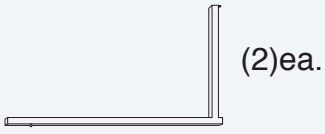

STEP **9** See figure 5

Slide in (1) rack bar into the top of the frame by pushing in the metal pin and sliding down into the frame.

FIGURE 5

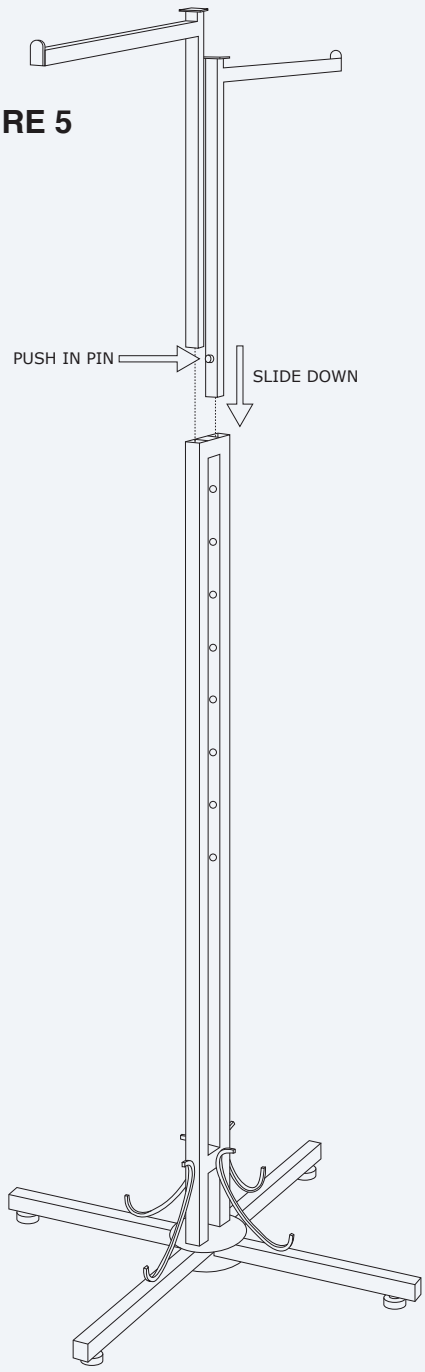

Assembly complete

Note: Make sure all screws for unit are tightly secured before hanging merchandise. Make sure the pins on the rack bars are locked into the frame at your desired height.

